Assessment report

Temperature analysis of steel members

Name of sponsor:	**Ovacon AB**		
Product name:	SprayTec S or SpreFix S		
File no.:	PHA11149A	**Revision no.:**	0
		Date:	19-12-2018
Pages:	12	**Encl.:**	18
Ref:	NOL / CAN		

Danish Institute of Fire and Security Technology

Jernholmen 12, DK-2650 Hvidovre · Phone: +45 36 34 90 00 · E-mail: dbi@dbi-net.dk · www.dbi-net.dk

ilac-MRA DANAK Test Reg.no. 0012

Client information

Client: Ovacon AB

Address: Box 64

SE-619 22 Trosa

Sweden

The results relate only to the items tested. The test report should only be reproduced in extenso - in extracts only with a written agreement with this institute.

Content

1 Purpose of the assessment

Analysis of an applied passive spray on protection system to steel members and how it contributes to the fire resistance.

The test specimens have been subjected to a standard fire test in accordance with the following standards:

DS/EN 1363-1:2012 Fire resistance tests – General requirements

in conjunction with

DS/EN 13381-4:2013: Test methods for determining the contribution to the fire resistance of structural members – Part 4: Applied passive protection to steel members - Annex D and E.

2 Data

Basis for the analysis are test data from fire tests according to EN 13381-4:2013 listed below:

File no.	**Lab.**	**Date of issue**	**Standard**	**Test specimens**
PGA11300A	Danish Institute of Fire and Security Technology	December 2018	EN 13381-4:2013	Loaded beams and reference beams protected with 20 mm and 90 mm.
PGA11300B	Danish Institute of Fire and Security Technology	December 2018	EN 13381-4:2013	Short section columns protected with 20-90mm.

All data used in this assessment report originates from the above mentioned test reports.

The result from PGA11300A was for the load-bearing capacity of the beams 62 minutes for LB2 and 135 minutes for LB1. The load was removed after 66 minutes from LB2 and after 140 minutes for LB1.

The components for the test specimens in the test reports were sampled, delivered and mounted by the sponsor.

3 Drawings and description

Details of the construction are shown in the enclosed documentation as stated below:

Type	Drawing No.	Dated	Subject
Drawing	1	18-12-2018	IPE400 covered with 90 mm SprayTec S insulation
Drawing	2	18-12-2018	IPE400 covered with 20 mm SprayTec S insulation
Drawing	3	18-12-2018	HEA120 and IPE200 covered with 45 and 65mm SprayTec S insulation
Drawing	4	18-12-2018	HEM300 covered with 20 mm SprayTec S insulation

The documentation is supplied by the sponsor and it is stamped by DBI - Danish Institute of Fire and Security Technology

Description

The test specimen consisted of the components described in the following. DBI inspected the components during mounting, the test and after the test.

Fire protection system

Principal components:	Fire protection material Spray on insulation Manufacturer: Ovacon AB Designated: SprayTec S or SpreFix S (Two products names for the same system) Nominal density: 140 kg/m³ Nominal moisture content: below 7% (depends on the environment) Nominal thickness: 20, 45, 65 and 90 mm
Insulation:	The spray insulations consisted of 4 components: Stone wool, a two component adhesive system and water. The stone wool is designated "Lapinus type 709R" produced by Lapinus, Rockwool BV. The component A is designated LPA and is mixed with water with 1 part LPA and 2 parts of fresh clean water. The component B is designated LPB and is mixed with water with 1 part LPB and 4 parts of fresh clean water. The components are mixed during mounting in a ratio of 1 kg of wool to 0.25 kg of LPA and 0.625 kg of LPB.
Mounting:	The spray insulation is sprayed on with a customized machine that mixed insulation with the two fluids (LPA and LPB) at the tip of the nozzle of the spray on machine. The mixtures is sprayed directly on the steel members and is continuously padded with a plasterer so it is evenly distributes with the same compressed level. The thicknesses are controlled continuously to insure the correct thickness. See drawing no. 1 to no. 4 for details.

Test specimens

The following steel members are part of the analysis and were measured by DBI:

Name	Test no.	Exposure to fire	Profile type	Nominal Profiled Section factor	Measured values					Profiled	
					H	B	t_f	t_w	A	P	Actual Section factor
				[mm^{-1}]	[mm]	[mm]	[mm]	[mm]	[mm^2]	[mm]	[mm^{-1}]
LB1	**PGA11300A**	3 sides	IPE 400	164	402	180	13.4	9.1	8201	1325	162
SBref1	**PGA11300A**	3 sides	IPE 400	164	402	179	13.4	9.1	8202	1324	161
LB2	**PGA11300A**	3 sides	IPE 400	164	402	179	13.4	9.1	8204	1323	161
SBref2	**PGA11300A**	3 sides	IPE 400	164	402	180	13.3	9.0	8167	1326	162
SC1	**PGA11300B**	4 sides	HEM 300	63	343	308	38.1	21.4	29156	1875	64
SC2	**PGA11300B**	4 sides	HEM 300	63	342	306	38.0	21.3	28915	1867	65
SC3	**PGA11300B**	4 sides	HEM 300	63	342	307	38.2	21.3	29134	1870	64
SC4	**PGA11300B**	4 sides	HEB 180	168	182	181	13.4	8.4	6163	1071	174
SC5	**PGA11300B**	4 sides	HEB 180	168	182	181	13.4	8.5	6178	1072	173
SC6	**PGA11300B**	4 sides	HEB 180	168	181	181	13.4	8.4	6132	1068	174
SC7	**PGA11300B**	4 sides	HEA 120	290	116	121	7.7	5.6	2421	704	291
SC8	**PGA11300B**	4 sides	HEA 120	290	116	121	7.7	5.5	2406	704	293
SC9	**PGA11300B**	4 sides	HEA 120	290	116	121	7.7	5.5	2407	703	292
SC10	**PGA11300B**	4 sides	HEA 120	290	116	121	7.7	5.5	2402	704	293
SC11	**PGA11300B**	4 sides	IPE 120	381	121	64	6.4	4.7	1322	489	370
SC12	**PGA11300B**	4 sides	IPE 120	381	120	65	6.3	4.6	1317	491	373
SC13	**PGA11300B**	4 sides	IPE 120	381	120	65	6.3	4.6	1312	490	374

The table shows the average measured values of the steel profiles used to calculate the actual section factor.

The actual measured thickness of the protection material for each steel member is shown in the two tables below:

Test specimen	Nominal Thickness	Measured thickness			Criteria's - 20% ±avg thickness		
		Average Thickness	Minimum Thickness	Maximum Thickness	Demand-	Demand+	Pass/Fail
	[mm]	[mm]	[mm]	[mm]	[mm]	[mm]	[-]
LB1	90	**97.7**	83.0	107.0	78.1	117.2	Pass
SBref1	90	**99.9**	92.0	105.0	80.0	119.9	Pass
LB2	20	**21.4**	18.0	25.0	17.1	25.7	Pass
SBref2	20	**22.1**	18.0	25.0	17.7	26.5	Pass

Test specimen	Nominal Thickness	Measured thickness			Criterias - 20% ±avg thickness		
		Average Thickness	Minimum Thickness	Maximum Thickness	Demand-	Demand+	Pass/Fail
	[mm]	[mm]	[mm]	[mm]	[mm]	[mm]	[-]
SC1	20	20.7	15	**23.5***	16.5	24.8	Fail
SC2	45	**48.3**	42.5	57	38.7	58.0	Pass
SC3	65	**68.0**	61	74	54.4	81.5	Pass
SC4	20	**22.0**	19.5	25	17.6	26.4	Pass
SC5	65	**70.0**	63	76	56.0	84.0	Pass
SC6	90	**96.9**	90	107	77.5	116.3	Pass
SC7	20	**22.6**	20.5	25	18.1	27.1	Pass
SC8	45	48.7	43	**60***	38.9	58.4	Fail
SC9	65	**69.1**	57	75	55.3	82.9	Pass
SC10	90	**93.9**	86	100	75.1	112.7	Pass
SC11	45	**50.4**	47.5	53	40.3	60.5	Pass
SC12	65	**68.7**	60	80	54.9	82.4	Pass
SC13	90	**93.5**	85	101	74.8	112.2	Pass

*Where the thickness criteria failed, the maximum thickness is used in the calculations according to section 6.5.2 in EN 13381-4.

The average values of the protection thickness measured by DBI on the extra samples:

Product		Spray insulation	Spray insulation	Spray insulation	Spray insulation	Spray insulation
Density*	kg/m³	118	111	108	110	-
Thickness**	mm	20.2	43.8	64.7	90.5	-
Moisture content	%	0.81	0.93	0.77	1.25	-
Organic content	%	-	-	-	-	1.25
Sampling method		Extra material	Extra material	Extra material	Extra material	Extra material
Drying temperature		105°C	105°C	105°C	105°C	105°C

*The density is measured as described in Annex B of EN 13381-4.
**The thicknesses are measured on the extra samples of two of each nominal thickness at nine locations each; as described in EN 13381-4.

4 Methodology

The preparation of the data from the tests follows the procedure described in Clause 13 of EN 13381-4:2013.

The data analysis follows Annex E5 as described in EN 13381-4:2013: Numerical regression analysis as requested by the sponsor.

5 Correction of data

The data for the analysis is the steel temperatures measured in the steel members – in the short columns, in the loaded beams and in the related reference beams. The scope of the assessment is to cover the design temperatures of 300°C to 500°C and a fire resistance period of 15 minutes to 120 minutes.

Steel section	Graph	Description
Loaded beams and reference beams	Enclosure 1.0 and 1.1	Characteristic steel temperatures during the test.
Unloaded short section columns	Enclosure 2.0 and 2.1	Overall mean steel temperatures during the test.

The input for the analysis of the beams is the overall mean steel temperature plus the maximum temperature steel temperature divided by two.

The input for the analysis of the short columns is the overall mean steel temperature, which has been calculated for each of the short columns as them mean of each measuring station divided by the number of measuring stations.

The correction of data follows the assessment methodology described in Annex D in EN 13381-4:2013

The temperatures of the beams have been used to calculate the correction factor K_i:

Correction factor k_i at the given design temperatures								
Element	Section factor	Protection Thickness	[°C]	300	350	400	450	500
SC1	64	23.5	[-]	0.90	0.90	0.90	0.90	0.90
SC2	65	48.3	[-]	0.88	0.88	0.88	0.87	0.87
SC3	64	68.0	[-]	0.86	0.86	0.86	0.86	0.86
SC4	174	22.0	[-]	0.90	0.90	0.90	0.90	0.90
SC5	173	70.0	[-]	0.86	0.86	0.86	0.85	0.85
SC6	174	96.9	[-]	0.84	0.83	0.83	0.83	0.83
SC7	291	22.6	[-]	0.90	0.90	0.90	0.90	0.90
SC8	293	60.0	[-]	0.87	0.87	0.86	0.86	0.86
SC9	292	69.1	[-]	0.86	0.86	0.86	0.86	0.85
SC10	293	93.9	[-]	0.84	0.83	0.83	0.83	0.83
SC11	370	50.4	[-]	0.88	0.87	0.87	0.87	0.87
SC12	373	68.7	[-]	0.86	0.86	0.86	0.86	0.86
SC13	374	93.5	[-]	0.84	0.83	0.83	0.83	0.83

The temperatures of the columns have been calculated to give the time where each profile reaches the different design temperatures:

TTR - Time to reach design temperature								
Element	Section factor	Protection Thickness	[°C]	300	350	400	450	500
SC1	64	23.5	[min]	61.3	69.0	76.3	84.0	92.0
SC2	65	48.3	[min]	89.0	99.3	109.7	120.0	131.0
SC3	64	68.0	[min]	97.7	107.7	118.0	128.0	138.7
SC4	174	22.0	[min]	39.0	43.7	48.0	52.0	56.3
SC5	173	70.0	[min]	78.7	84.3	89.7	95.3	101.3
SC6	174	96.9	[min]	102.7	110.7	118.3	125.0	132.3
SC7	291	22.6	[min]	31.3	35.3	39.7	43.3	47.0
SC8	293	60.0	[min]	46.7	51.0	55.0	59.3	63.7
SC9	292	69.1	[min]	71.7	77.7	83.0	88.0	93.3
SC10	293	93.9	[min]	72.7	77.0	81.3	85.7	90.0
SC11	370	50.4	[min]	46.7	50.3	54.0	57.3	61.0
SC12	373	68.7	[min]	57.3	61.0	64.7	67.7	71.0
SC13	374	93.5	[min]	72.0	75.7	79.3	82.7	86.3

The corrections factor is used to calculate the corrected time where each profile reaches the different design temperatures:

Corrected TTR - Time to reach design temperature								
Element	Section factor	Protection Thickness	[°C]	300	350	400	450	500
SC1	64	23.5	[min]	55.2	62.1	68.6	75.3	82.4
SC2	65	48.3	[min]	78.2	87.1	96.0	104.9	114.4
SC3	64	68.0	[min]	84.1	92.4	101.2	109.7	118.7
SC4	174	22.0	[min]	35.2	39.3	43.2	46.7	50.5
SC5	173	70.0	[min]	67.6	72.2	76.7	81.5	86.5
SC6	174	96.9	[min]	85.8	92.0	98.3	103.8	109.8
SC7	291	22.6	[min]	28.2	31.8	35.7	38.9	42.1

SC8	293	60.0	[min]	40.5	44.2	47.6	51.3	54.9
SC9	292	69.1	[min]	61.6	66.6	71.1	75.3	79.8
SC10	293	93.9	[min]	60.9	64.3	67.8	71.4	74.9
SC11	370	50.4	[min]	40.9	44.0	47.2	50.0	53.1
SC12	373	68.7	[min]	49.3	52.3	55.4	57.9	60.7
SC13	374	93.5	[min]	60.4	63.2	66.2	68.9	71.9

6 Numerical Regression Analysis

The data analysis follows the assessment methodology for numerical regression analyses as described in Annex E5 in EN 13381-4:2013.

Characteristic for the analysis:
The predicted and modified TTR values give the following values when evaluating the criteria for acceptability:

Modification coefficient (K): 0.955
a) Maximum percentage difference (all points shall be < 15%),max is 14.99%
b) Average difference (shall be < 0%), is -3.71%
c) Number of differences >0% (shall be < 30%), is 29.23%

Inspecting the calculated minimum thickness shown in enclosure 3 to 7 shows that the predicted TTR fulfils the acceptance criteria's from d) 1. to 6, section 13.5 in EN 13381-4:2013 .

7 Permitted extensions

According to EN 13381-4:2013, clause 15, the following extensions are allowed in relation to the test extent:

	Range in test	**Range of assessment**
Section factor A_m/V	64 m^{-1} to 374 m^{-1}	58 m^{-1} to 411 m^{-1}
Actual Fire protection material thickness	22.0 mm to 96.9 mm	20.9 mm to 101.8 mm

The assessment is based on loaded beams only, without a tall steel column section test.

Using,

$$t = a_0 + a_1 \cdot d_p + a_2 \cdot \frac{d_p}{A_m/V} + a_3 \cdot \theta_a + a_4 \cdot d_p \cdot \theta_a + a_5 \cdot d_p \cdot \frac{\theta_a}{A_m/V} + a_6 \cdot \frac{\theta_a}{A_m/V} + a_7 \cdot \frac{1}{A_m/V}$$

With the following constants: a_0: 4.52371, a_1: -0.2597, a_2: 57.067, a_3: 0.02747, a_4:0.00051, a_5: -0.07863, a_6: 8.97795, a_7: -1404.89 within the permitted range regarding: section factor A_m/V, fire protection thicknesses d_p and design temperature T_D ,results in the following design tables for open steel sections:

Parameter	Table	Description
Design table 15 minutes	Enclosure 3	Minimum thickness of fire protection required to stay below t=300, 350,.....500°C after 15 minutes.
Design table 30 minutes	Enclosure 4	Minimum thickness of fire protection required to stay below t=300, 350,.....500°C after 30 minutes.
Design table 60 minutes	Enclosure 5	Minimum thickness of fire protection required to stay below t=300, 350,.....500°C after 60 minutes.
Design table 90 minutes	Enclosure 6	Minimum thickness of fire protection required to stay below t=300, 350,.....500°C after 90 minutes.
Design table 120 minutes	Enclosure 7	Minimum thickness of fire protection required to stay below t=300, 350,.....500°C after 120 minutes.

According to Annex A in EN 13381-4 the needed protection thickness for hollow sections such as RHS, SHS and CHS can be calculated from the results for I and H sections following the formulas given in the Annex. The tables are calculated with the minimum thickness required to keep the hollow steel sections below the design temperatures:

Parameter	Table	Description
Design table 15 minutes	Enclosure 8	Minimum thickness of fire protection required to stay below t=300, 350,.....500°C after 15 minutes.
Design table 30 minutes	Enclosure 9	Minimum thickness of fire protection required to stay below t=300, 350,.....500°C after 30 minutes.
Design table 60 minutes	Enclosure 10	Minimum thickness of fire protection required to stay below t=300, 350,.....500°C after 60 minutes.
Design table 90 minutes	Enclosure 11	Minimum thickness of fire protection required to stay below t=300, 350,.....500°C after 90 minutes.
Design table 120 minutes	Enclosure 12	Minimum thickness of fire protection required to stay below t=300, 350,.....500°C after 120 minutes.

8 Conclusion

This data analysis report quantify the fire protection ability of the SprayTec S or SpreFix S sprayed on to steel section within the range:

Structural members:	Beam and columns (maximum depth (h) of cross-section is 600 mm for beams and 800 mm for columns)
Protection:	Three and four sided application
Steel sections:	I/H sections and hollow sections according to Annex A, EN 13381-4:2013*
Section factor, A_m/V:	Minimum 58 m^{-1} to maximum 411 m^{-1}
Design temperature:	300°C to 500°C
Fire resistance time:	15 minutes to 120 minutes
Minimum thickness:	20.9 mm
Intermediate thicknesses:	As stated in Enclosure 3 to 7 for open sections and 4 to 12 for hollow sections.
Maximum thickness:	101.8 mm

*According to annex A in EN 13381-4:2013 the protection thickness for hollow steel sections can be calculated from the results of the "I" and "H" sections of the same" A_p/V values. See enclosure 8-12.

9 Remarks

The limits of the assessment report appears from: EN 13381-4:2013, clause 15.

This report provides the result of the data analysis when the specified fire protection system described herein was tested and analysed following the procedure of EN 13381-4:2013. Any significant deviations with respect to thickness and density of the fire protection material and constructional details, loads stresses, edge or end conditions other than allowed under the application could invalidate the result.

Because of the nature of fire resistance testing and the consequent difficulty in quantifying the uncertainty of measurement of fire resistance, it is not possible to provide a stated degree of accuracy of the result.

This report has only been printed in a pdf-version. DBI has not issued a hard copy version.

Production tolerances are not considered.

Danish Institute of Fire and Security Technology

Niklas O. Lauersen
M.Sc. (Civ.Eng.)

Christian Bjerglund Andersen
M.Sc. (Civ.Eng.)

Ovacon AB
Box 64
SE-619 22 Trosa
Sweden

Enclosures:	**14**
DBI graphs and tables:	14
Sponsors drawings:	4

Loaded beams and reference beams

The characteristic steel temperature of the beams

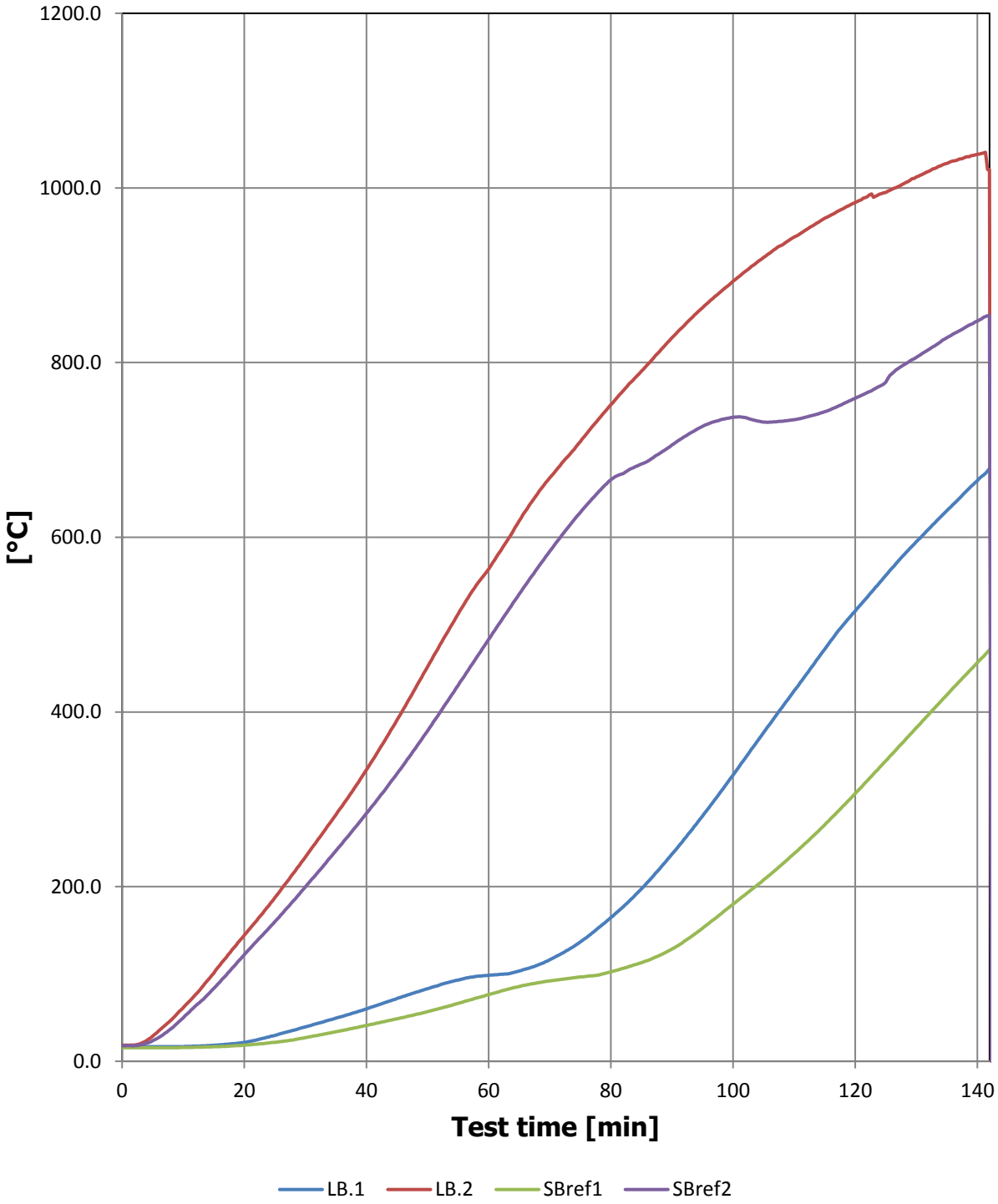

Loaded beams and reference beams

The characteristic steel temperature of the beams

Min. / °C	LB.1	LB.2	SBref1	SBref2
0	17	19	15	18
5	17	29	16	23
10	17	62	16	50
15	18	101	17	83
20	22	145	18	122
25	30	187	22	160
30	39	234	27	200
35	49	282	34	241
40	60	334	41	284
45	72	391	49	329
50	83	452	57	379
55	93	512	66	431
60	98	564	76	483
65	103	619	86	535
70	116	668	92	584
75	137	710	96	629
80	164	752	102	666
85	197	790	113	684
90	237	828	128	705
95	281	863	152	727
100	328	893	180	737
105	376	920	208	732
110	424	944	238	735
115	472	965	271	744
120	516	984	307	759
125	556	995	344	778
130	595	1013	382	806
135	630	1028	420	829
140	665	1038	456	848
142	679	1021	471	854

Unloaded short section columns

The characteristic steel temperature of the columns

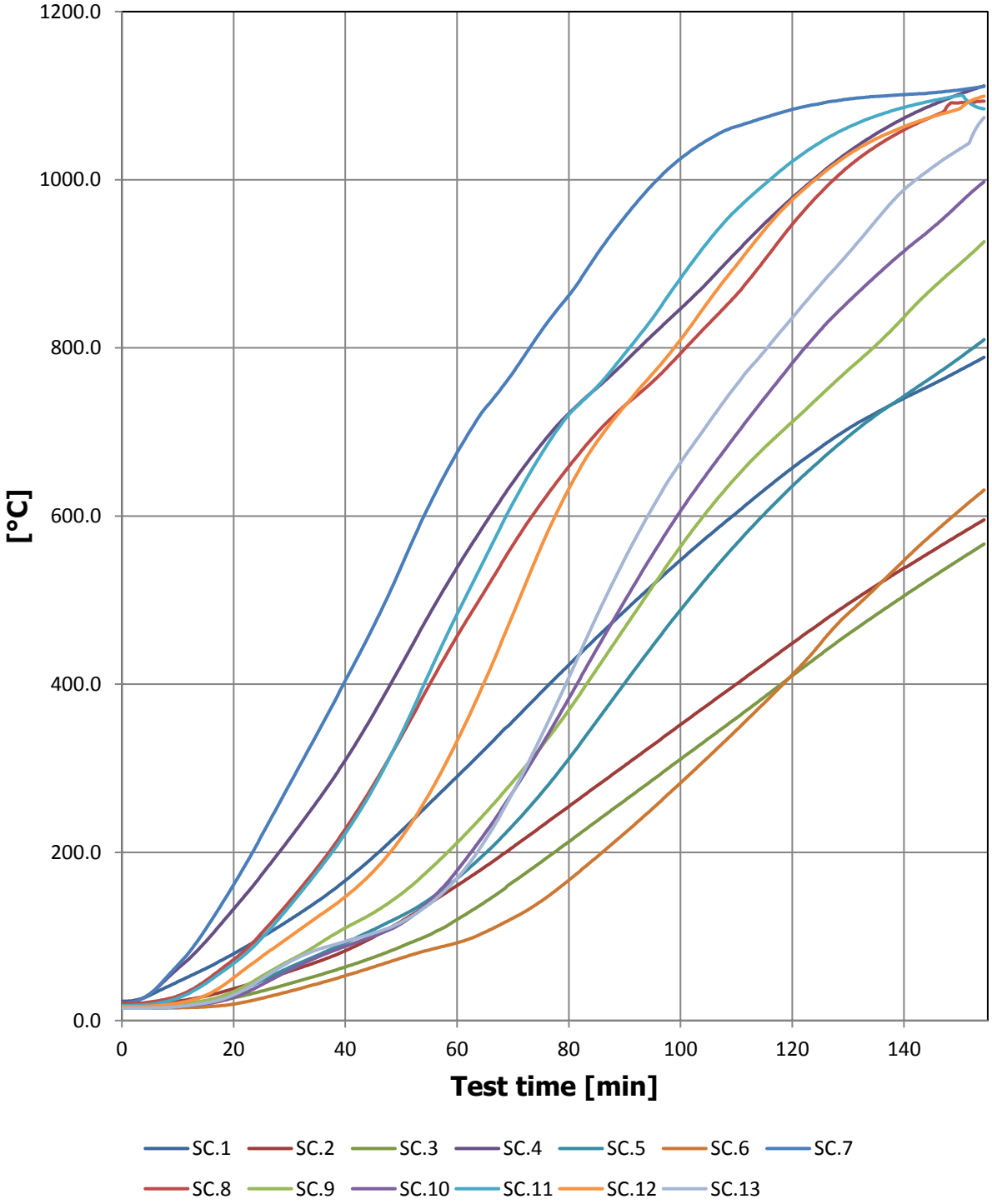

Unloaded short section columns

The characteristic steel temperature of the columns

Min. / °C	SC.1	SC.2	SC.3	SC.4	SC.5	SC.6	SC.7	SC.8	SC.9	SC.10	SC.11	SC.12	SC.13
0	23	20	17	22	17	15	21	21	17	15	18	17	15
5	30	20	17	32	17	15	32	22	17	15	19	17	15
10	46	23	19	62	19	15	66	29	19	16	27	21	17
15	62	29	21	94	23	16	109	47	24	20	44	30	21
20	80	38	27	133	32	20	162	73	34	28	68	51	30
25	99	48	35	173	47	26	220	104	52	43	98	76	49
30	120	59	44	216	63	35	281	142	71	60	136	99	70
35	142	70	54	261	78	44	342	182	90	75	177	123	84
40	166	83	64	310	92	53	404	228	110	88	223	147	94
45	194	99	75	364	108	64	468	280	128	100	276	177	104
50	225	118	88	423	124	74	540	338	151	115	341	217	117
55	258	139	102	482	144	84	612	399	179	142	413	269	138
60	290	161	120	539	169	92	675	457	211	178	483	332	169
65	323	183	141	591	199	105	728	511	247	223	550	404	214
70	356	206	165	640	232	122	770	565	284	272	615	483	271
75	390	230	188	685	270	142	820	615	325	326	673	563	337
80	423	255	213	722	311	167	862	659	369	383	721	633	408
85	456	279	237	752	356	194	911	699	418	442	753	688	481
90	487	303	262	783	401	223	956	731	467	499	793	731	549
95	518	328	286	816	446	252	994	760	516	554	835	769	610
100	548	352	311	847	488	283	1025	793	564	606	883	810	663
105	576	376	335	879	529	314	1048	828	607	653	927	855	711
110	604	400	360	914	567	345	1063	863	647	697	965	899	756
115	631	424	385	948	602	378	1074	904	681	740	994	940	796
120	657	449	410	979	636	411	1084	947	712	782	1022	976	836
125	682	473	435	1007	666	448	1091	984	743	821	1045	1005	875
130	704	495	459	1033	694	484	1096	1015	774	855	1062	1030	912
135	723	517	483	1055	720	515	1099	1040	803	886	1076	1049	952
140	740	538	505	1073	743	547	1101	1059	837	915	1086	1063	988
145	756	558	527	1089	765	578	1103	1075	870	942	1094	1075	1014
150	773	578	549	1102	788	607	1107	1092	900	972	1100	1085	1037
154	788	594	565	1111	808	629	1111	1093	924	996	1085	1099	1072

Fire Resistance Period		15	minutes		
Design Temperature [°C]	300	350	400	450	500
Section factor [m^{-1}]	Thickness in mm of Fire Protection Material to Maintain Steel Temperature Below Design Temperature				
58	20.9	20.9	20.9	20.9	20.9
60	20.9	20.9	20.9	20.9	20.9
70	20.9	20.9	20.9	20.9	20.9
80	20.9	20.9	20.9	20.9	20.9
90	20.9	20.9	20.9	20.9	20.9
100	20.9	20.9	20.9	20.9	20.9
110	20.9	20.9	20.9	20.9	20.9
120	20.9	20.9	20.9	20.9	20.9
130	20.9	20.9	20.9	20.9	20.9
140	20.9	20.9	20.9	20.9	20.9
150	20.9	20.9	20.9	20.9	20.9
160	20.9	20.9	20.9	20.9	20.9
170	20.9	20.9	20.9	20.9	20.9
180	20.9	20.9	20.9	20.9	20.9
190	20.9	20.9	20.9	20.9	20.9
200	20.9	20.9	20.9	20.9	20.9
210	20.9	20.9	20.9	20.9	20.9
220	20.9	20.9	20.9	20.9	20.9
230	20.9	20.9	20.9	20.9	20.9
240	20.9	20.9	20.9	20.9	20.9
250	20.9	20.9	20.9	20.9	20.9
260	20.9	20.9	20.9	20.9	20.9
270	20.9	20.9	20.9	20.9	20.9
280	20.9	20.9	20.9	20.9	20.9
290	20.9	20.9	20.9	20.9	20.9
300	20.9	20.9	20.9	20.9	20.9
310	20.9	20.9	20.9	20.9	20.9
320	20.9	20.9	20.9	20.9	20.9
330	20.9	20.9	20.9	20.9	20.9
340	20.9	20.9	20.9	20.9	20.9
350	20.9	20.9	20.9	20.9	20.9
360	20.9	20.9	20.9	20.9	20.9
370	20.9	20.9	20.9	20.9	20.9
380	20.9	20.9	20.9	20.9	20.9
390	20.9	20.9	20.9	20.9	20.9
400	20.9	20.9	20.9	20.9	20.9
410	20.9	20.9	20.9	20.9	20.9
411	20.9	20.9	20.9	20.9	20.9

Fire Resistance Period		30	minutes		
Design Temperature [°C]	300	350	400	450	500
Section factor [m^{-1}]	Thickness in mm of Fire Protection Material to Maintain Steel Temperature Below Design Temperature				
58	20.9	20.9	20.9	20.9	20.9
60	20.9	20.9	20.9	20.9	20.9
70	20.9	20.9	20.9	20.9	20.9
80	20.9	20.9	20.9	20.9	20.9
90	20.9	20.9	20.9	20.9	20.9
100	20.9	20.9	20.9	20.9	20.9
110	20.9	20.9	20.9	20.9	20.9
120	20.9	20.9	20.9	20.9	20.9
130	20.9	20.9	20.9	20.9	20.9
140	20.9	20.9	20.9	20.9	20.9
150	20.9	20.9	20.9	20.9	20.9
160	20.9	20.9	20.9	20.9	20.9
170	20.9	20.9	20.9	20.9	20.9
180	20.9	20.9	20.9	20.9	20.9
190	20.9	20.9	20.9	20.9	20.9
200	21.1	20.9	20.9	20.9	20.9
210	21.9	20.9	20.9	20.9	20.9
220	22.7	20.9	20.9	20.9	20.9
230	23.4	20.9	20.9	20.9	20.9
240	24.1	20.9	20.9	20.9	20.9
250	24.7	20.9	20.9	20.9	20.9
260	25.3	20.9	20.9	20.9	20.9
270	25.9	20.9	20.9	20.9	20.9
280	26.4	20.9	20.9	20.9	20.9
290	26.9	20.9	20.9	20.9	20.9
300	27.4	21.4	20.9	20.9	20.9
310	27.9	21.9	20.9	20.9	20.9
320	28.3	22.3	20.9	20.9	20.9
330	28.7	22.8	20.9	20.9	20.9
340	29.1	23.2	20.9	20.9	20.9
350	29.5	23.6	20.9	20.9	20.9
360	29.8	23.9	20.9	20.9	20.9
370	30.2	24.3	20.9	20.9	20.9
380	30.5	24.6	20.9	20.9	20.9
390	30.8	25.0	20.9	20.9	20.9
400	31.1	25.3	20.9	20.9	20.9
410	31.4	25.6	20.9	20.9	20.9
411	31.4	25.6	20.9	20.9	20.9

Fire Resistance Period		60	minutes		
Design Temperature [°C]	300	350	400	450	500
Section factor [m^{-1}]	Thickness in mm of Fire Protection Material to Maintain Steel Temperature Below Design Temperature				
58	28.0	20.9	20.9	20.9	20.9
60	29.5	21.2	20.9	20.9	20.9
70	35.5	27.8	20.9	20.9	20.9
80	40.9	33.4	25.5	20.9	20.9
90	45.6	38.4	30.8	22.8	20.9
100	49.8	42.7	35.4	27.8	20.9
110	53.5	46.6	39.4	32.1	24.5
120	56.9	50.0	43.0	35.8	28.5
130	59.9	53.1	46.2	39.2	32.0
140	62.7	55.9	49.1	42.1	35.2
150	65.3	58.5	51.6	44.8	38.0
160	67.6	60.8	54.0	47.2	40.5
170	69.7	62.9	56.1	49.4	42.7
180	71.7	64.9	58.1	51.4	44.8
190	73.5	66.7	59.9	53.2	46.6
200	75.2	68.3	61.5	54.9	48.4
210	76.8	69.9	63.1	56.4	49.9
220	78.3	71.3	64.5	57.8	51.4
230	79.7	72.7	65.8	59.2	52.7
240	81.0	73.9	67.0	60.4	53.9
250	82.2	75.1	68.2	61.5	55.1
260	83.4	76.2	69.3	62.6	56.2
270	84.5	77.2	70.3	63.6	57.2
280	85.5	78.2	71.2	64.5	58.1
290	86.4	79.1	72.1	65.4	59.0
300	87.4	80.0	73.0	66.3	59.8
310	88.2	80.8	73.8	67.0	60.6
320	89.1	81.6	74.5	67.8	61.3
330	89.8	82.4	75.2	68.5	62.0
340	90.6	83.1	75.9	69.1	62.7
350	91.3	83.7	76.6	69.8	63.3
360	92.0	84.4	77.2	70.4	63.9
370	92.6	85.0	77.8	70.9	64.5
380	93.3	85.6	78.3	71.5	65.0
390	93.9	86.1	78.9	72.0	65.5
400	94.4	86.7	79.4	72.5	66.0
410	95.0	87.2	79.9	73.0	66.5
411	95.0	87.2	79.9	73.0	66.5

Fire Resistance Period		90	minutes		
Design Temperature [°C]	300	350	400	450	500
Section factor [m^{-1}]	Thickness in mm of Fire Protection Material to Maintain Steel Temperature Below Design Temperature				
58	59.7	52.7	45.1	36.7	27.5
60	61.8	55.0	47.5	39.3	30.3
70	70.8	64.3	57.3	49.7	41.6
80	78.7	72.3	65.6	58.5	50.9
90	85.6	79.4	72.8	65.9	58.6
100	91.8	85.5	79.1	72.3	65.3
110	97.3	91.0	84.6	77.9	71.0
120	-	95.9	89.4	82.8	76.0
130	-	100.4	93.8	87.1	80.3
140	-	-	97.7	91.0	84.2
150	-	-	101.2	94.4	87.6
160	-	-	-	97.6	90.7
170	-	-	-	100.4	93.5
180	-	-	-	-	96.1
190	-	-	-	-	98.4
200	-	-	-	-	100.5
210	-	-	-	-	-
220	-	-	-	-	-
230	-	-	-	-	-
240	-	-	-	-	-
250	-	-	-	-	-
260	-	-	-	-	-
270	-	-	-	-	-
280	-	-	-	-	-
290	-	-	-	-	-
300	-	-	-	-	-
310	-	-	-	-	-
320	-	-	-	-	-
330	-	-	-	-	-
340	-	-	-	-	-
350	-	-	-	-	-
360	-	-	-	-	-
370	-	-	-	-	-
380	-	-	-	-	-
390	-	-	-	-	-
400	-	-	-	-	-
410	-	-	-	-	-
411	-	-	-	-	-

Fire Resistance Period		**120**		minutes	
Design Temperature [°C]	300	350	400	450	500
Section factor [m^{-1}]	Thickness in mm of Fire Protection Material to Maintain Steel Temperature Below Design Temperature				
58	91.3	85.8	79.7	73.1	65.8
60	94.2	88.7	82.8	76.3	69.1
70	-	100.8	95.2	89.1	82.5
80	-	-	-	99.8	93.5
90	-	-	-	-	-
100	-	-	-	-	-
110	-	-	-	-	-
120	-	-	-	-	-
130	-	-	-	-	-
140	-	-	-	-	-
150	-	-	-	-	-
160	-	-	-	-	-
170	-	-	-	-	-
180	-	-	-	-	-
190	-	-	-	-	-
200	-	-	-	-	-
210	-	-	-	-	-
220	-	-	-	-	-
230	-	-	-	-	-
240	-	-	-	-	-
250	-	-	-	-	-
260	-	-	-	-	-
270	-	-	-	-	-
280	-	-	-	-	-
290	-	-	-	-	-
300	-	-	-	-	-
310	-	-	-	-	-
320	-	-	-	-	-
330	-	-	-	-	-
340	-	-	-	-	-
350	-	-	-	-	-
360	-	-	-	-	-
370	-	-	-	-	-
380	-	-	-	-	-
390	-	-	-	-	-
400	-	-	-	-	-
410	-	-	-	-	-
411	-	-	-	-	-

Fire Resistance Period		15	minutes		
Design Temperature [°C]	300	350	400	450	500
Section factor [m^{-1}]	Thickness in mm of Fire Protection Material to Maintain Steel Temperature Below Design Temperature				
58	22.1	22.1	22.1	22.1	22.1
60	22.1	22.1	22.1	22.1	22.1
70	22.3	22.3	22.3	22.3	22.3
80	22.6	22.6	22.6	22.6	22.6
90	22.8	22.8	22.8	22.8	22.8
100	23.0	23.0	23.0	23.0	23.0
110	23.2	23.2	23.2	23.2	23.2
120	23.4	23.4	23.4	23.4	23.4
130	23.6	23.6	23.6	23.6	23.6
140	23.8	23.8	23.8	23.8	23.8
150	24.0	24.0	24.0	24.0	24.0
160	24.2	24.2	24.2	24.2	24.2
170	24.4	24.4	24.4	24.4	24.4
180	24.6	24.6	24.6	24.6	24.6
190	24.8	24.8	24.8	24.8	24.8
200	25.1	25.1	25.1	25.1	25.1
210	25.3	25.3	25.3	25.3	25.3
220	25.5	25.5	25.5	25.5	25.5
230	25.7	25.7	25.7	25.7	25.7
240	25.9	25.9	25.9	25.9	25.9
250	26.1	26.1	26.1	26.1	26.1
260	26.1	26.1	26.1	26.1	26.1
270	26.1	26.1	26.1	26.1	26.1
280	26.1	26.1	26.1	26.1	26.1
290	26.1	26.1	26.1	26.1	26.1
300	26.1	26.1	26.1	26.1	26.1
310	26.1	26.1	26.1	26.1	26.1
320	26.1	26.1	26.1	26.1	26.1
330	26.1	26.1	26.1	26.1	26.1
340	26.1	26.1	26.1	26.1	26.1
350	26.1	26.1	26.1	26.1	26.1
360	26.1	26.1	26.1	26.1	26.1
370	26.1	26.1	26.1	26.1	26.1
380	26.1	26.1	26.1	26.1	26.1
390	26.1	26.1	26.1	26.1	26.1
400	26.1	26.1	26.1	26.1	26.1
410	26.1	26.1	26.1	26.1	26.1
411	26.1	26.1	26.1	26.1	26.1

Fire Resistance Period		30	minutes		
Design Temperature [°C]	300	350	400	450	500
Section factor [m^{-1}]	Thickness in mm of Fire Protection Material to Maintain Steel Temperature Below Design Temperature				
58	22.1	22.1	22.1	22.1	22.1
60	22.1	22.1	22.1	22.1	22.1
70	22.3	22.3	22.3	22.3	22.3
80	22.6	22.6	22.6	22.6	22.6
90	22.8	22.8	22.8	22.8	22.8
100	23.0	23.0	23.0	23.0	23.0
110	23.2	23.2	23.2	23.2	23.2
120	23.4	23.4	23.4	23.4	23.4
130	23.6	23.6	23.6	23.6	23.6
140	23.8	23.8	23.8	23.8	23.8
150	24.0	24.0	24.0	24.0	24.0
160	24.2	24.2	24.2	24.2	24.2
170	24.4	24.4	24.4	24.4	24.4
180	24.6	24.6	24.6	24.6	24.6
190	24.8	24.8	24.8	24.8	24.8
200	25.3	25.1	25.1	25.1	25.1
210	26.5	25.3	25.3	25.3	25.3
220	27.6	25.5	25.5	25.5	25.5
230	28.8	25.7	25.7	25.7	25.7
240	29.8	25.9	25.9	25.9	25.9
250	30.9	26.1	26.1	26.1	26.1
260	31.6	26.1	26.1	26.1	26.1
270	32.3	26.1	26.1	26.1	26.1
280	33.0	26.1	26.1	26.1	26.1
290	33.6	26.1	26.1	26.1	26.1
300	34.2	26.8	26.1	26.1	26.1
310	34.8	27.4	26.1	26.1	26.1
320	35.4	27.9	26.1	26.1	26.1
330	35.9	28.5	26.1	26.1	26.1
340	36.4	29.0	26.1	26.1	26.1
350	36.8	29.5	26.1	26.1	26.1
360	37.3	29.9	26.1	26.1	26.1
370	37.7	30.4	26.1	26.1	26.1
380	38.1	30.8	26.1	26.1	26.1
390	38.5	31.2	26.1	26.1	26.1
400	38.9	31.6	26.1	26.1	26.1
410	39.2	32.0	26.1	26.1	26.1
411	39.3	32.0	26.1	26.1	26.1

Fire Resistance Period		60	minutes		
Design Temperature [°C]	300	350	400	450	500
Section factor [m^{-1}]	Thickness in mm of Fire Protection Material to Maintain Steel Temperature Below Design Temperature				
58	29.6	22.1	22.1	22.1	22.1
60	31.2	22.5	22.1	22.1	22.1
70	38.0	29.7	22.3	22.3	22.3
80	44.1	36.1	27.5	22.6	22.6
90	49.7	41.8	33.6	24.9	22.8
100	54.7	47.0	38.9	30.5	23.0
110	59.4	51.7	43.8	35.6	27.2
120	63.7	56.0	48.2	40.1	31.9
130	67.7	60.0	52.2	44.3	36.2
140	71.5	63.7	55.9	48.0	40.1
150	75.0	67.2	59.4	51.5	43.7
160	78.4	70.5	62.6	54.8	46.9
170	81.6	73.6	65.7	57.8	50.0
180	84.6	76.5	68.5	60.6	52.8
190	87.5	79.3	71.3	63.3	55.5
200	90.3	82.0	73.8	65.9	58.0
210	93.0	84.5	76.3	68.3	60.4
220	95.5	87.0	78.7	70.6	62.7
230	98.0	89.4	80.9	72.8	64.8
240	100.4	91.6	83.1	74.9	66.9
250	-	93.9	85.2	76.9	68.9
260	-	95.2	86.6	78.3	70.2
270	-	96.5	87.9	79.5	71.5
280	-	97.8	89.0	80.7	72.6
290	-	98.9	90.2	81.8	73.7
300	-	100.0	91.2	82.8	74.8
310	-	101.0	92.2	83.8	75.8
320	-	-	93.2	84.7	76.7
330	-	-	94.1	85.6	77.5
340	-	-	94.9	86.4	78.4
350	-	-	95.7	87.2	79.1
360	-	-	96.5	88.0	79.9
370	-	-	97.2	88.7	80.6
380	-	-	97.9	89.4	81.3
390	-	-	98.6	90.0	81.9
400	-	-	99.2	90.6	82.5
410	-	-	99.8	91.2	83.1
411	-	-	99.9	91.3	83.1

Fire Resistance Period		90	minutes		
Design Temperature [°C]	300	350	400	450	500
Section factor [m^{-1}]	Thickness in mm of Fire Protection Material to Maintain Steel Temperature Below Design Temperature				
58	63.1	55.7	47.7	38.9	29.1
60	65.5	58.3	50.4	41.7	32.2
70	75.8	68.8	61.3	53.2	44.5
80	85.0	78.1	70.9	63.1	54.9
90	93.3	86.5	79.3	71.8	63.9
100	101.0	94.1	87.0	79.5	71.8
110	-	101.1	93.9	86.4	78.8
120	-	-	100.2	92.7	85.1
130	-	-	-	98.4	90.8
140	-	-	-	-	96.0
150	-	-	-	-	100.8
160	-	-	-	-	-
170	-	-	-	-	-
180	-	-	-	-	-
190	-	-	-	-	-
200	-	-	-	-	-
210	-	-	-	-	-
220	-	-	-	-	-
230	-	-	-	-	-
240	-	-	-	-	-
250	-	-	-	-	-
260	-	-	-	-	-
270	-	-	-	-	-
280	-	-	-	-	-
290	-	-	-	-	-
300	-	-	-	-	-
310	-	-	-	-	-
320	-	-	-	-	-
330	-	-	-	-	-
340	-	-	-	-	-
350	-	-	-	-	-
360	-	-	-	-	-
370	-	-	-	-	-
380	-	-	-	-	-
390	-	-	-	-	-
400	-	-	-	-	-
410	-	-	-	-	-
411	-	-	-	-	-

Fire Resistance Period		**120**	minutes		
Design Temperature [°C]	300	350	400	450	500
Section factor [m^{-1}]	Thickness in mm of Fire Protection Material to Maintain Steel Temperature Below Design Temperature				
58	96.6	90.8	84.3	77.3	69.6
60	99.9	94.1	87.8	80.9	73.3
70	-	-	-	95.3	88.3
80	-	-	-	-	101.0
90	-	-	-	-	-
100	-	-	-	-	-
110	-	-	-	-	-
120	-	-	-	-	-
130	-	-	-	-	-
140	-	-	-	-	-
150	-	-	-	-	-
160	-	-	-	-	-
170	-	-	-	-	-
180	-	-	-	-	-
190	-	-	-	-	-
200	-	-	-	-	-
210	-	-	-	-	-
220	-	-	-	-	-
230	-	-	-	-	-
240	-	-	-	-	-
250	-	-	-	-	-
260	-	-	-	-	-
270	-	-	-	-	-
280	-	-	-	-	-
290	-	-	-	-	-
300	-	-	-	-	-
310	-	-	-	-	-
320	-	-	-	-	-
330	-	-	-	-	-
340	-	-	-	-	-
350	-	-	-	-	-
360	-	-	-	-	-
370	-	-	-	-	-
380	-	-	-	-	-
390	-	-	-	-	-
400	-	-	-	-	-
410	-	-	-	-	-
411	-	-	-	-	-

Drawing no. 1

Date: 18-12-2018

SprayTec™ BY OVACON

DBI PHA11149A

Detail of test specimen for testing of loaded beam.

Type IPE400 covered with 90mm SprayTec S insulation

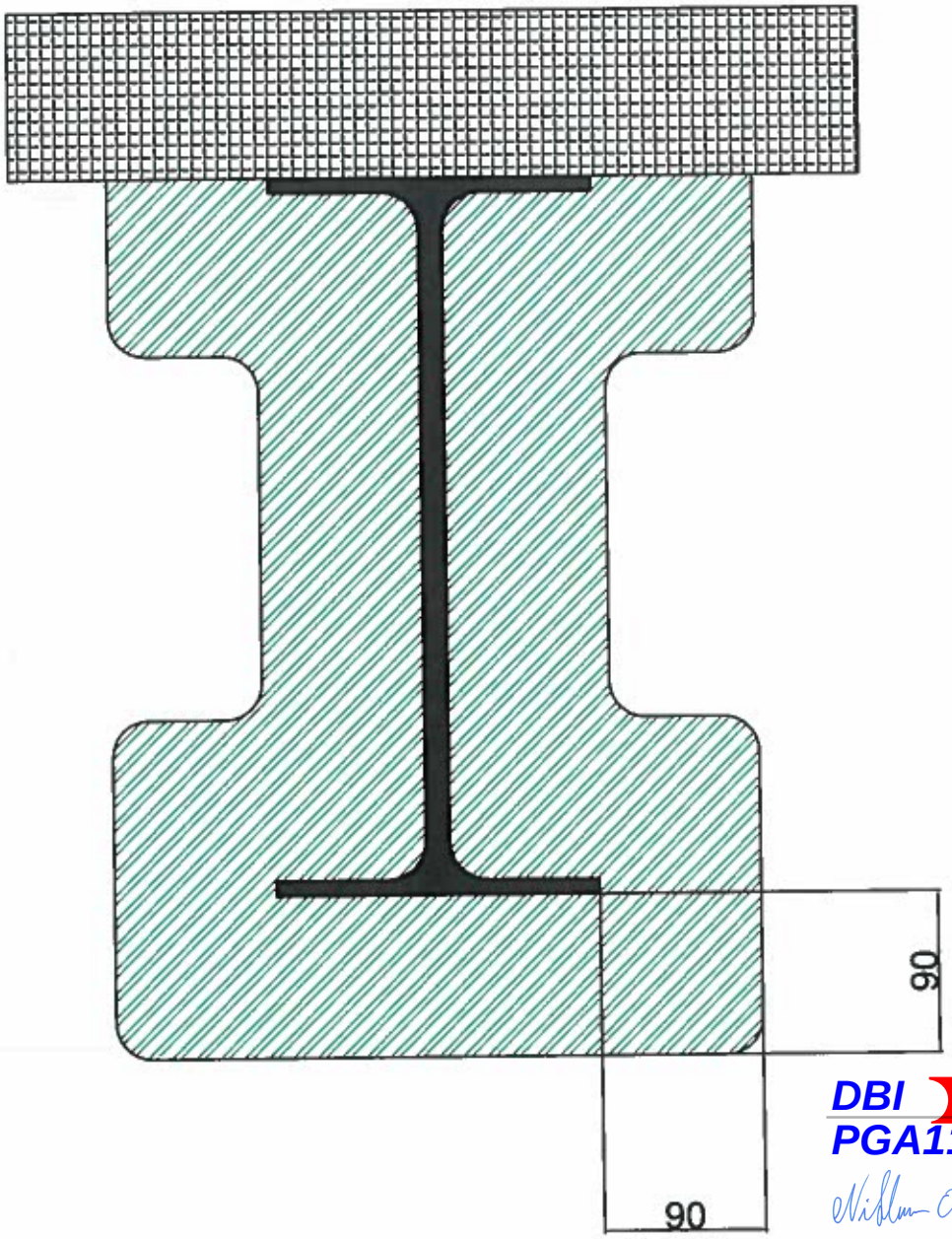

DBI PGA11300A

Drawing no. 2

Date: 18-12-2018

SprayTec™ BY OVACON

DBI PHA11149A

Detail of test specimen for testing of loaded beam.

Type IPE400 covered with 20mm SprayTec S insulation

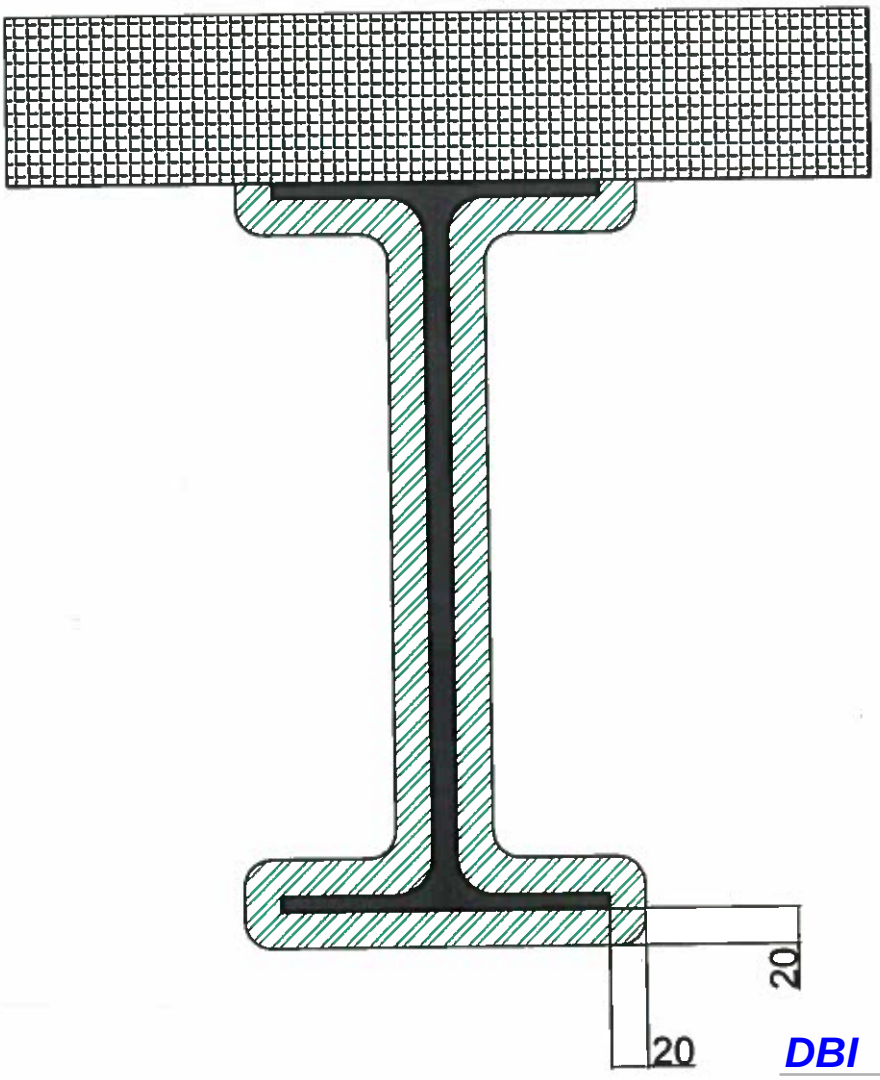

DBI PGA11300A

Drawing no. 3

Date: 18-12-2018

SprayTec™ BY OVACON

DBI PHA11149A

Detail of test specimen for testing of columns.

Type HEA120 covered with 45mm SprayTec S insulation

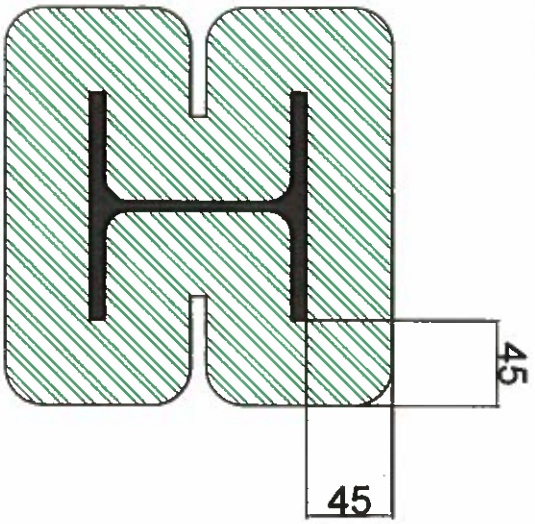

DBI PGA11300B

Detail of test specimen for testing of columns.

Type IPE200 covered with 65mm SprayTec S insulation

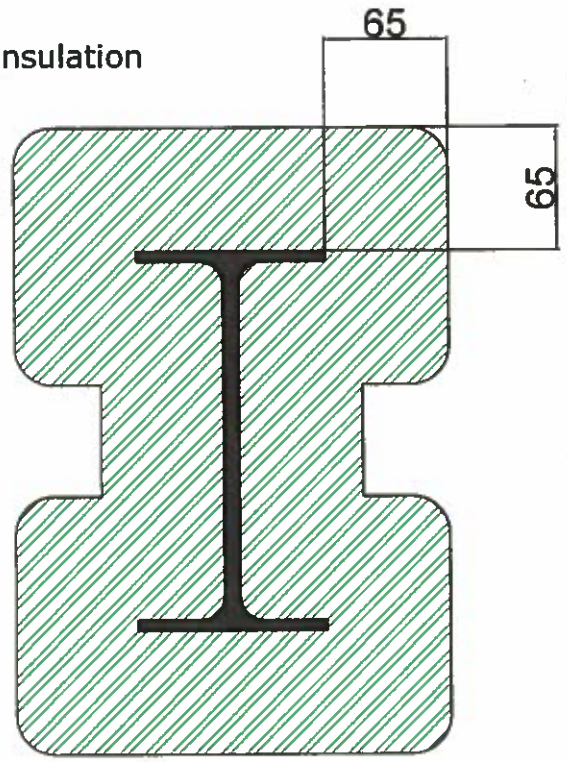

OVACON AB Box 64, SE-619 22 TROSA, SWEDEN, Telephone: +46 (0)156 130 80, Fax: +46 (0)156 164 20, spraytec@ovacon.se, www.spraytec.se

Drawing no. 4

Date: 18-12-2018

SprayTec™ BY OVACON

DBI PHA11149A

Detail of test specimen for testing of columns.

Type HEM300 covered with 20mm SprayTec S insulation

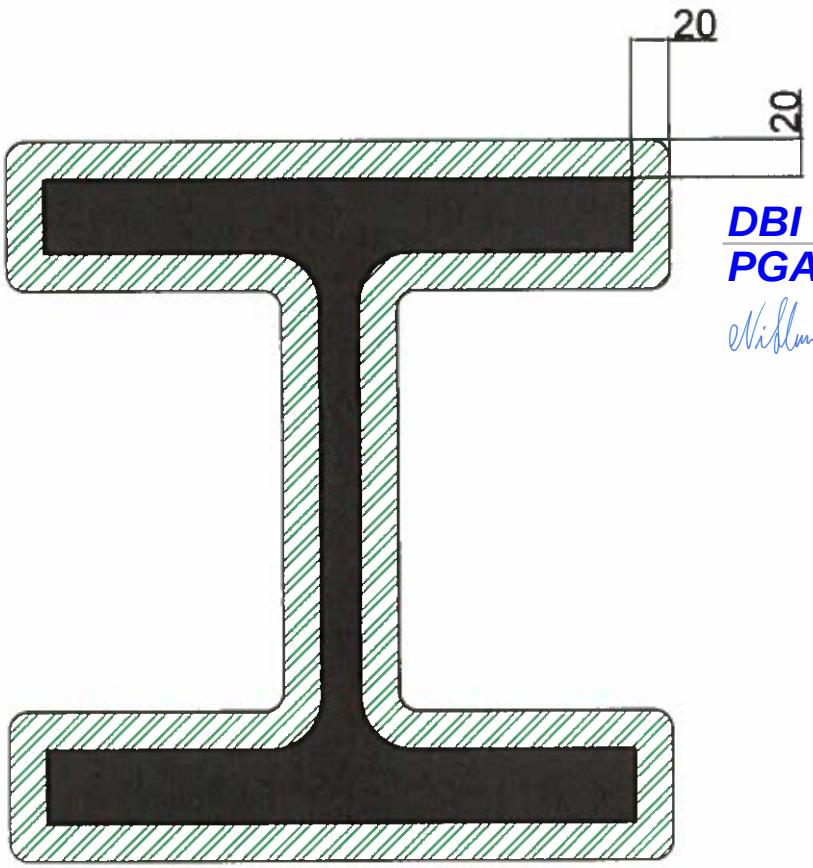

DBI PGA11300B

OVACON AB Box 64, SE-619 22 TROSA, SWEDEN, Telephone: +46 (0)156 130 80, Fax: +46 (0)156 164 20, spraytec@ovacon.se, www.spraytec.se